CONSTRUCTION DETAILS AND FITTINGS. SCALES. 3"=1' & FULL SIZE.

YACHTING MONTHLY

"JUNIOR" 13'-6" SAILING DINGHY.

YACHTING MONTHLY

DESIGNED BY. KENNETH M. GIBBS.

DESIGN No. 173. | SHEET 4 OF 5.

CENTRE PLATE TRUNK. SCALE 3"=1'.

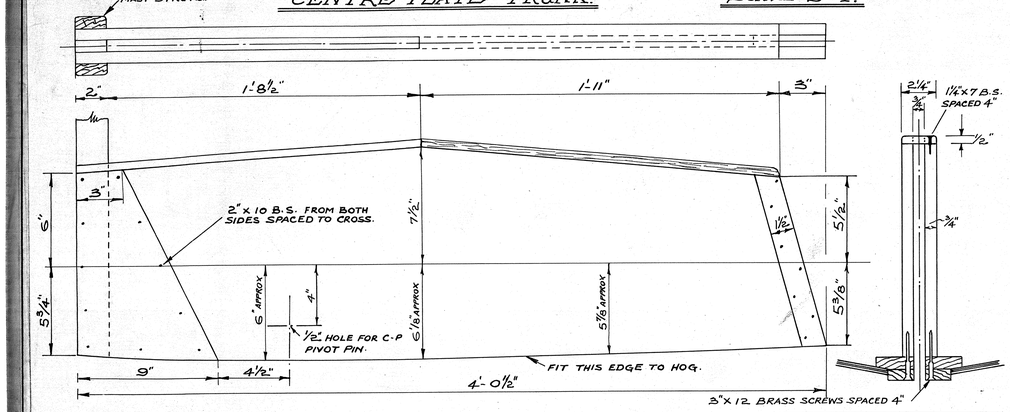

CENTRE PLATE. SCALE 3"=1'.

1/4" MILD STEEL. GALVED.

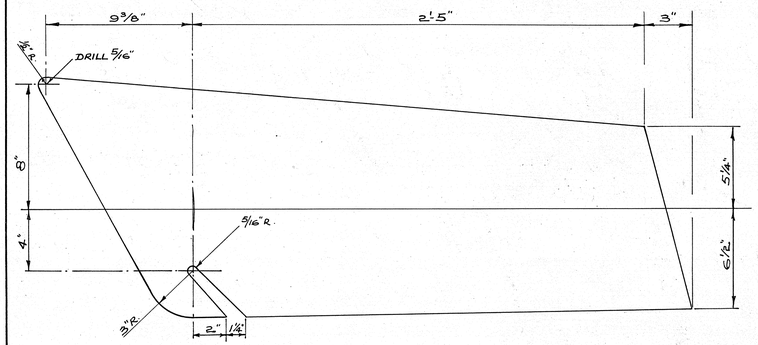

FIXED BLADE RUDDER. SCALE 3"=1'.

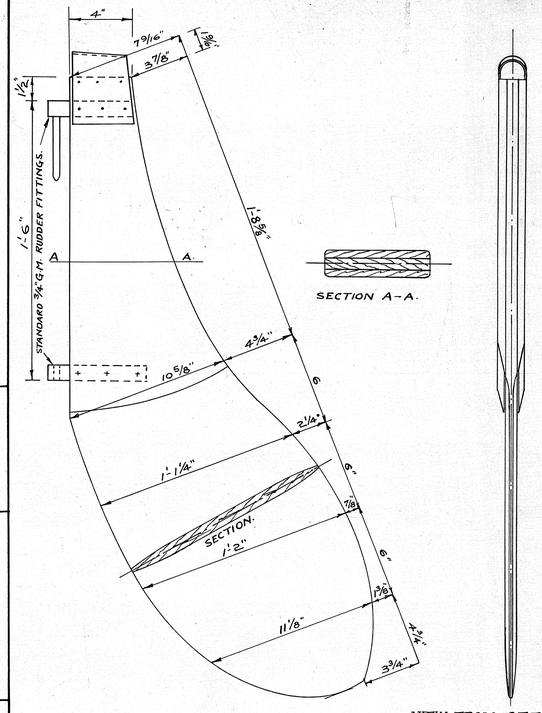

TILLER FOR BOTH TYPES OF RUDDER. SCALE 3"=1'

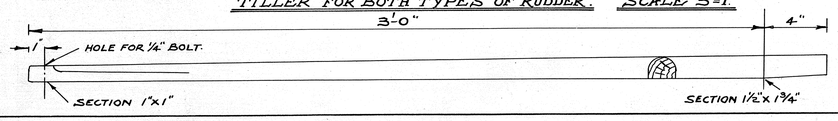

TILLER EXTENSION. SCALE 3"=1'

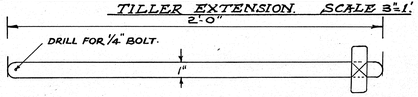

SHROUD PINS & KEEPER SPRINGS. SCALE. FULL SIZE.

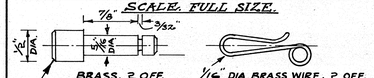

CONSTRUCTION DETAILS. SCALE. FULL SIZE.

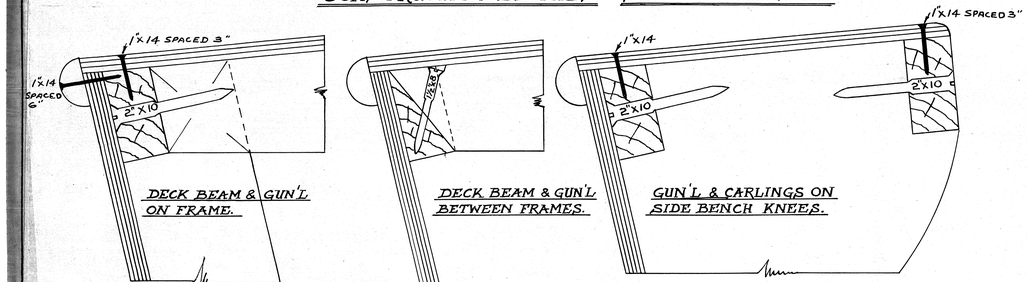

CHAIN PLATES. 2 OFF 14 G BRASS. SCALE. FULL SIZE.

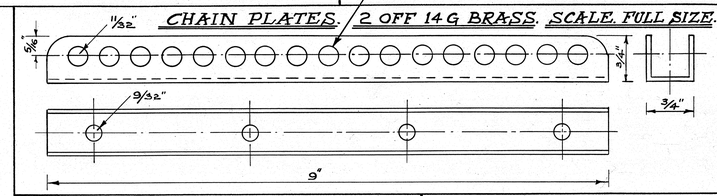

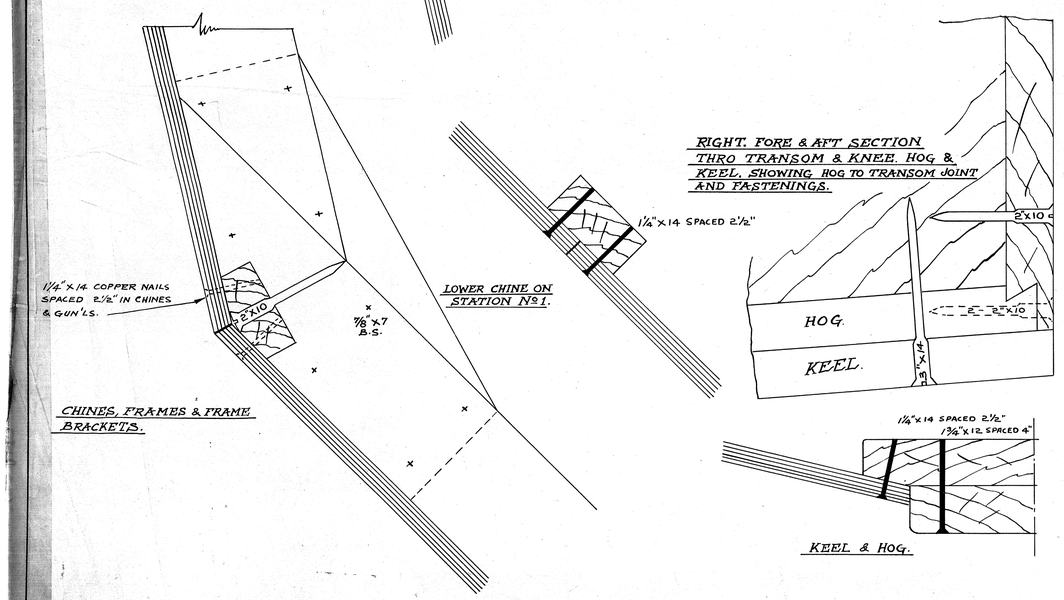

MAST BAND FOR BERMUDIAN MAST. 1 OFF. 1/16" BRASS. FULL SIZE.

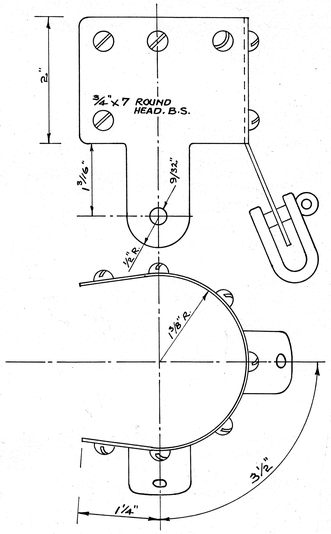

KICKING STRAP PLATE FOR BOOM. 1 OFF 1/16" BRASS. FULL SIZE.

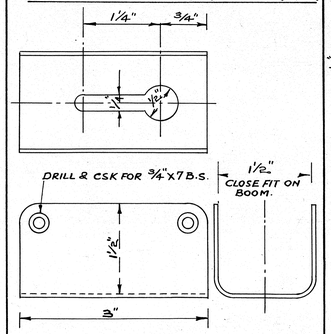

TOGGLE FOR KICKING STRAP

1 OFF BRASS. SCALE. FULL SIZE.

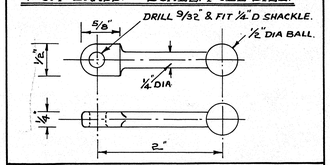

CENTR PLATE PIN. 1 OFF BRASS. SCALE. FULL SIZE.

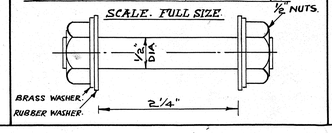
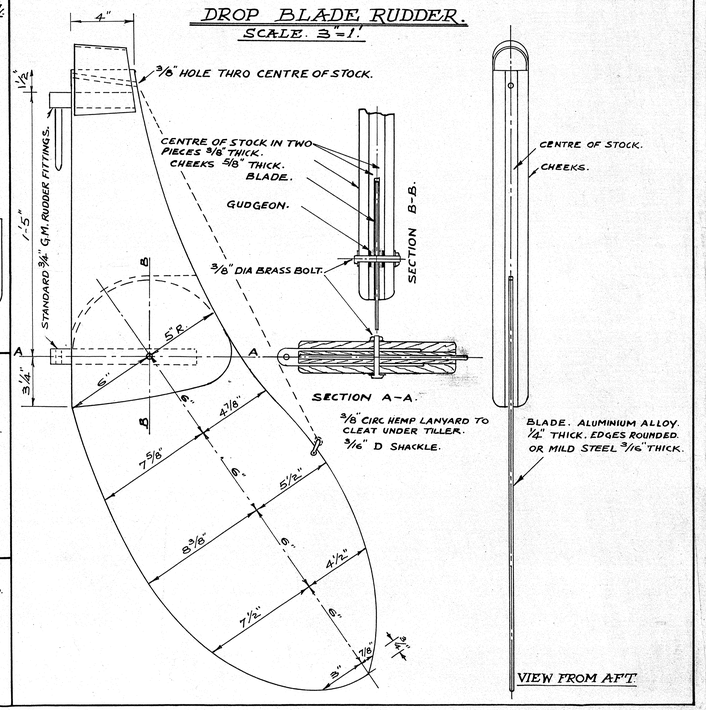
DROP BLADE RUDDER. SCALE. 3"=1'.